FORKARDT®

3FNC+G 215-66

POWER CHUCK WITH QUICK CHANGE JAW SYSTEM

FORKARDT® | 3FNC+G 215-66

POWER CHUCK WITH QUICK CHANGE JAW SYSTEM

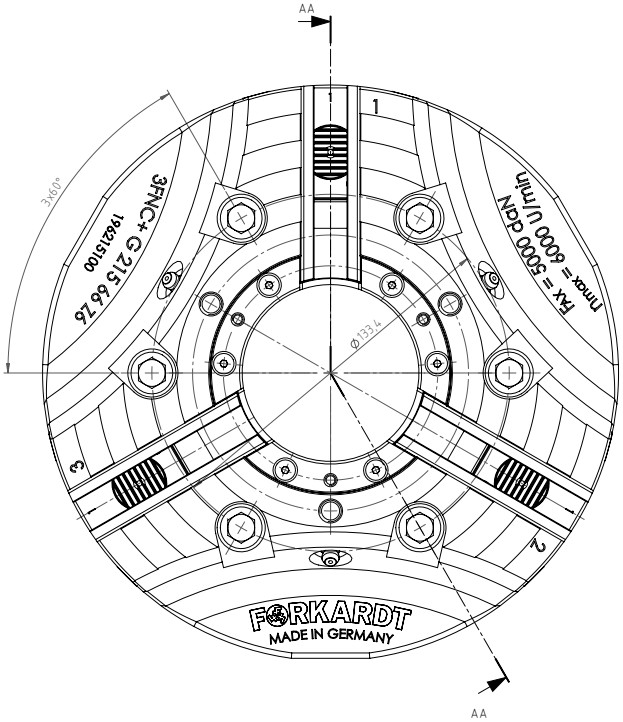

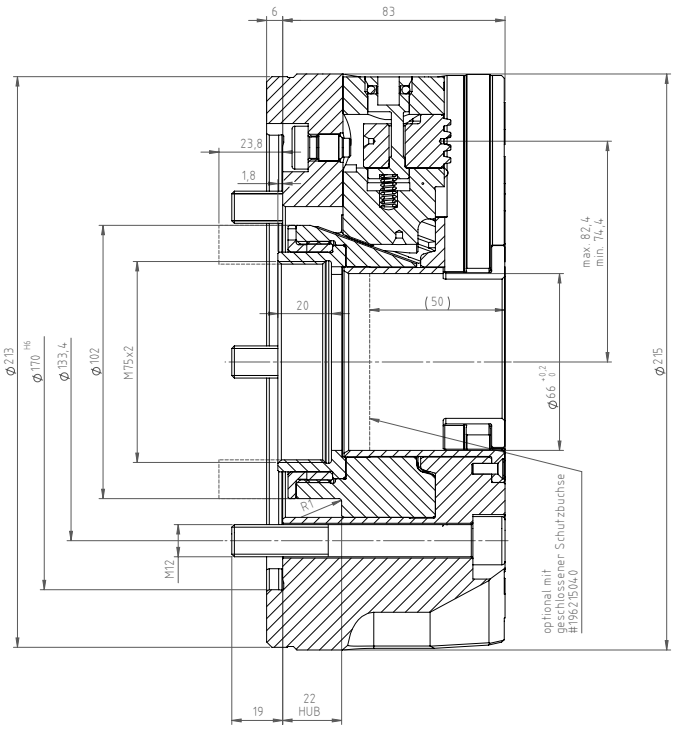

PERFORMANCE DATA		
Max. Speed	rpm.	6,000
Max. Clamping force	daN	9,000
Max. Actuating force	daN	5,000
Weight	Kg	18.3
Jaw stroke	mm	8
Serration	Straight serration	

FORKARDT® | 3FNC+G 215-66

POWER CHUCK WITH QUICK CHANGE JAW SYSTEM

CYL . MOUNTING DIN 6350

SPINDLE SIZE DIN55026	WITHOUT BASE AND TOP TOOLING	INCL. ONE PIECE STEP JAW (GSTB)	INCL. BASE & HARD TOP JAW (GGB + FHB)
Z 170	D196215100	D196215179	D196215178

MOUNTING SCREW 3	6 X M12

SHORT TAPER DIN 55026

To build on a spindle according to DIN 55026 you need an additional flange with the required cone size.

SPINDLE SIZE DIN55026	ITEM NUMBER
K6	D196215K06
K8	D196215K08

FORKARDT® | 3FNC+G 215-66

POWER CHUCK WITH QUICK CHANGE JAW SYSTEM

WRENCH FOR JAW CHANGE
D196215010

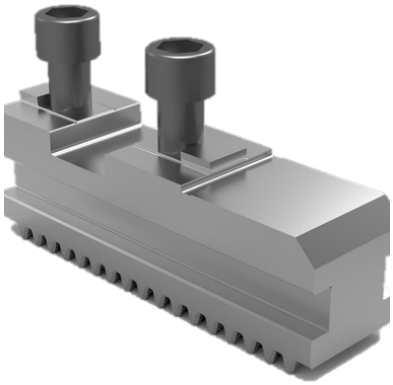

BASE JAW GGB200
D180577400

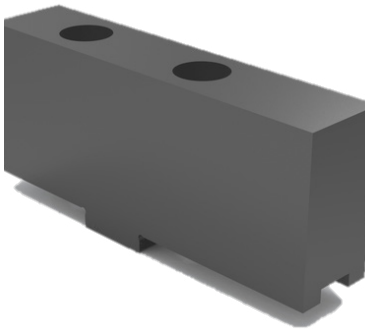

SOFT TOP JAW FWB200
D1070021525

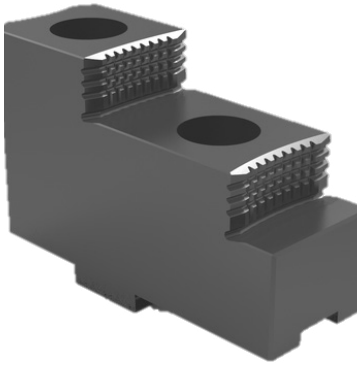

HARD TOP JAW FHB200
D1070021624

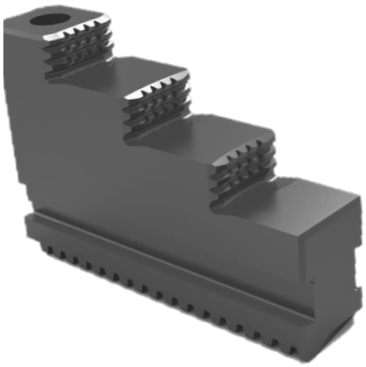

ONE PIECE STEPED JAW GSTB200
D1070021433

SOFT MONOBLOK JAW GMB200
D1070021434

FORKARDT® | 3FNC+G 215-66

POWER CHUCK WITH QUICK CHANGE JAW SYSTEM

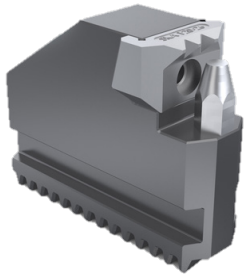

GRIPPER JAW OD-CLAMPING KBKTNC

Clamping Range	Item Number
Upon Request	Upon Request

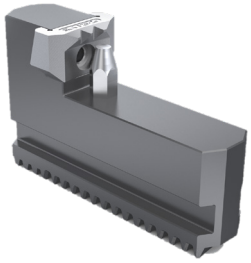

GRIPPER JAW ID-CLAMPING KBKTNC

Clamping Range	Item Number
Upon Request	Upon Request

GREASE (CARTRIDGE 400 GR) PF26

D410140026

GREASE (CAN 1 KG) PF26

D4101400126

FORKARDT® | 3FNC+G 215-66

POWER CHUCK WITH QUICK CHANGE JAW SYSTEM

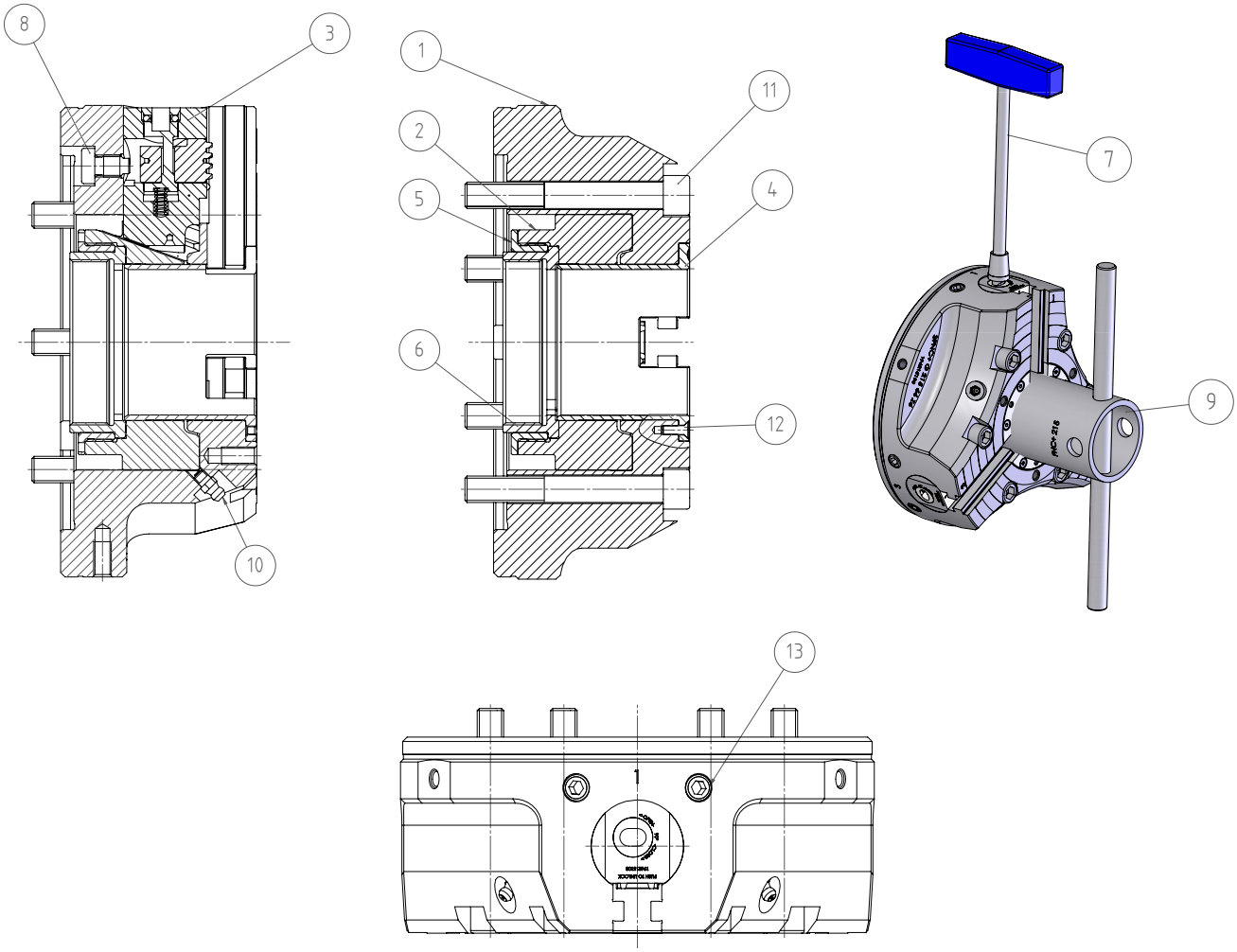

No.	LABEL	ITEM NUMBER
1	BODY	196215101
2	PISTON	196215002
3	DRIFT JAW COMPLETE	196215410
4	PROTECTIVE BUSHING	196215004
5	THREADED BUSHING COVER	196215007
6	THREADED BUSHING	196215008
7	KEY KPL	196215010
8	CAP SCREW	196185015
9	MOUNTING KEY COMPL.	196215020
10	LUBRICANT NIPPLE	7097KAM6X1
11	CAP SCREW	DIN912-M12x90-10.9
12	COUNTERSUNK SCREW	DIN7991-M4x12-10.9
13	GRUB SCREW	7051A12050