FORKARDT®

3FNC+G 315-104

POWER CHUCK WITH QUICK CHANGE JAW SYSTEM

FORKARDT® | 3FNC+G 315-104

POWER CHUCK WITH QUICK CHANGE JAW SYSTEM

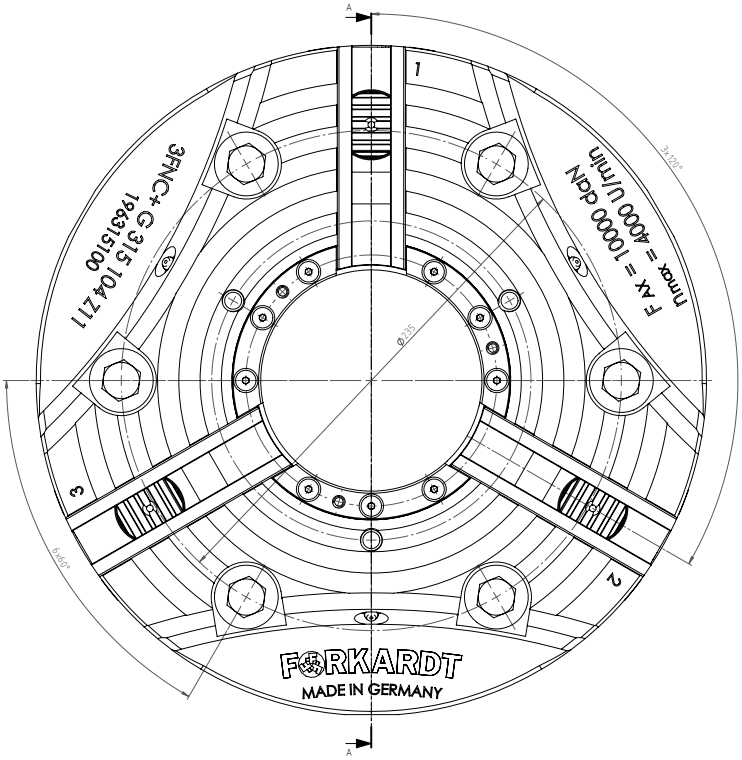

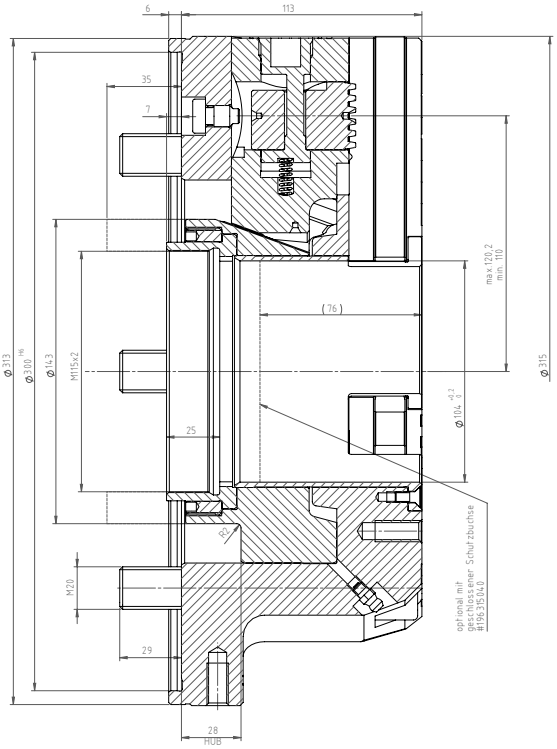

PERFORMANCE DATA		
Max. Speed	rpm	4,000
Max. Clamping force	daN	18,700
Max. Actuating force	daN	10,000
Weight	Kg	49. 7
Jaw stroke	mm	10.2
Serration	Straight serration	

FORKARDT® | 3FNC+G 315-104

POWER CHUCK WITH QUICK CHANGE JAW SYSTEM

CYL . MOUNTING DIN 6350

SPINDLE SIZE DIN55026	WITHOUT BASE AND TOP TOOLING	INCL. ONE PIECE STEP JAW (GSTB)	INCL. BASE & HARD TOP JAW (GGB + FHB)
Z 300	D196315100	D196315179	D196315178

MOUNTING SCREW	6 X M20

SHORT TAPER DIN 55026

To build on a spindle according to DIN 55026 you need an additional flange with the required cone size.

SPINDLE SIZE DIN55026	ITEM NUMBER
K8	D196315K08
K11	D196315K11

FORKARDT® | 3FNC+G 315-104

POWER CHUCK WITH QUICK CHANGE JAW SYSTEM

WRENCH FOR JAW CHANGE
D196315010

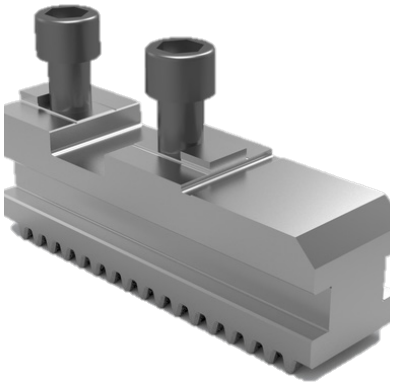

BASE JAW GGB315
D180596400

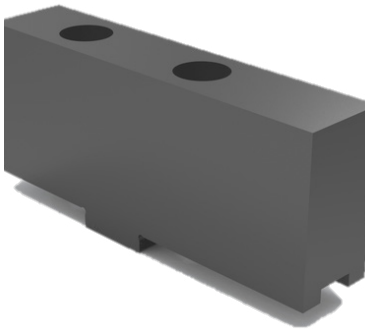

SOFT TOP JAW FWB315
D1070033425

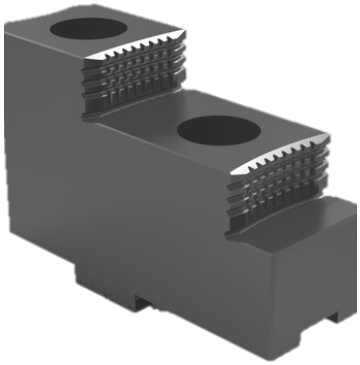

HARD TOP JAW FHB315
D1070033524

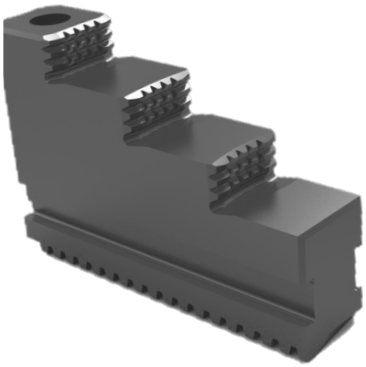

ONE PIECE STEPED JAW GSTB315
D1070033433

SOFT MONOBLOK JAW GMB315
D1070033434

FORKARDT® | 3FNC+G 315-104

POWER CHUCK WITH QUICK CHANGE JAW SYSTEM

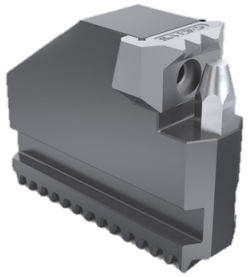

GRIPPER JAW OD-CLAMPING KBKTNC

Clamping Range	Item Number
Upon Request	Upon Request

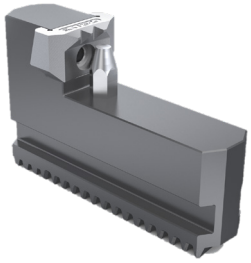

GRIPPER JAW ID-CLAMPING KBKTNC

Clamping Range	Item Number
Upon Request	Upon Request

GREASE (CARTRIDGE 400 GR) PF26

D410140026

GREASE (CAN 1 KG) PF26

D4101400126

FORKARDT® | 3FNC+G 315-104

POWER CHUCK WITH QUICK CHANGE JAW SYSTEM

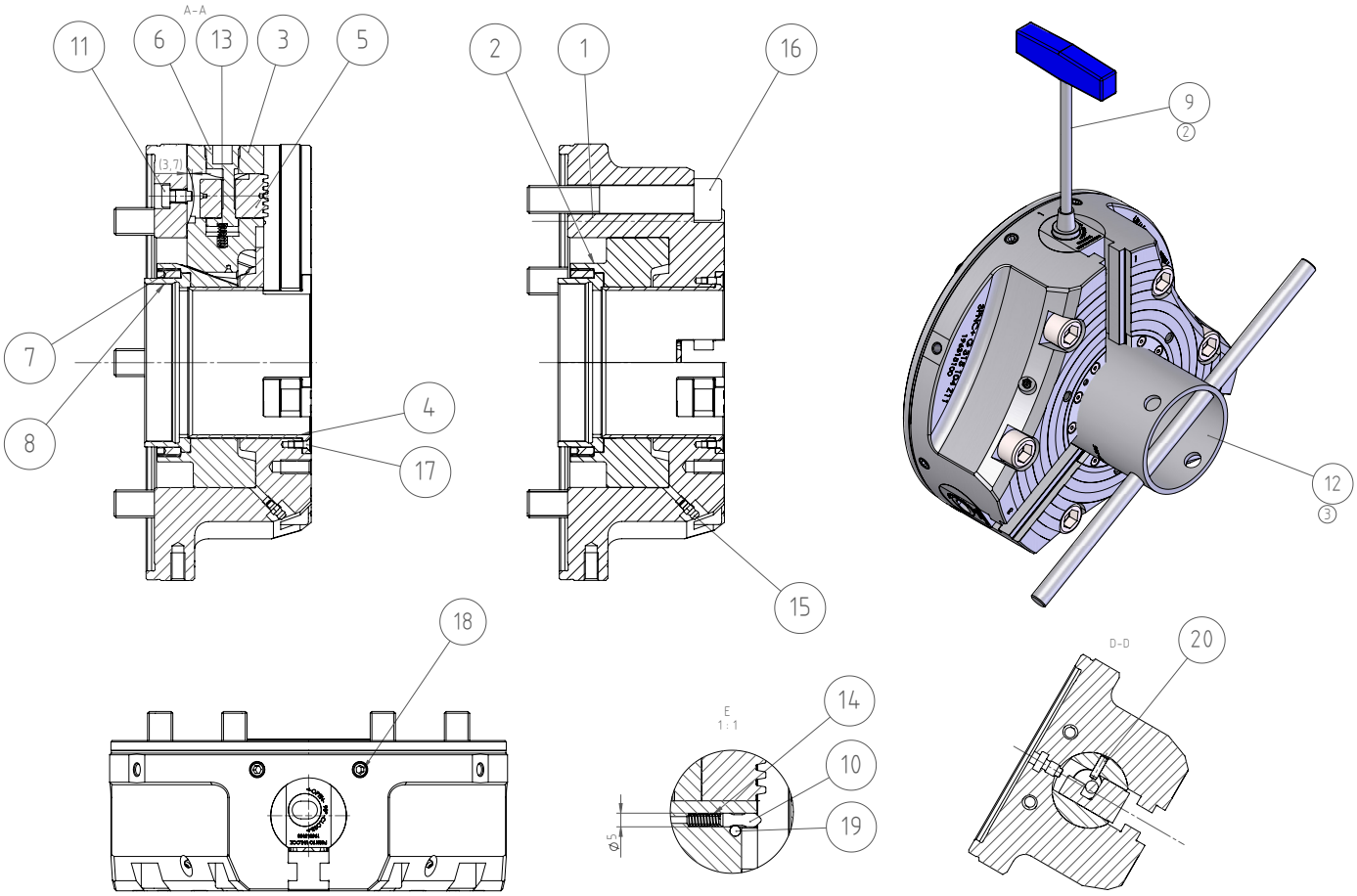

No.	LABEL	ITEM NUMBER
1	Body	196315101
2	Piston	196315002
3	Drift jaw	196315103
4	Protective bushing	196315004
5	Clutch bolt	196315105
6	Eccentric	196315006
7	Threaded bushing cover	196315007
8	Threaded bushing	196315008
9	Threaded bushing	196315010
10	Key kpl	196215011
11	Catch	196185015
12	Cylindrical screw	196315020
13	Assembly wrench complete	159574033
14	Compression spring 1.2*7.3*18.1	70710080A0
15	Compression spring 0.8*3.6*13	7097KAM6X1
16	Cheese head screw	
17	Countersunk screw	DIN7991-M5x12-10.9
18	Grub screw	7051A12050
19	Cylindrical pin with internal thread	7061C00416
20	Cylindrical pin with internal thread	7061C00632
21	Ball D6	7200000313