FORKARDT®

FORKARDT.COM

3FNC+G 400-125

POWER CHUCK WITH QUICK CHANGE JAW SYSTEM

FORKARDT® | 3FNC+G 400-125

POWER CHUCK WITH QUICK CHANGE JAW SYSTEM

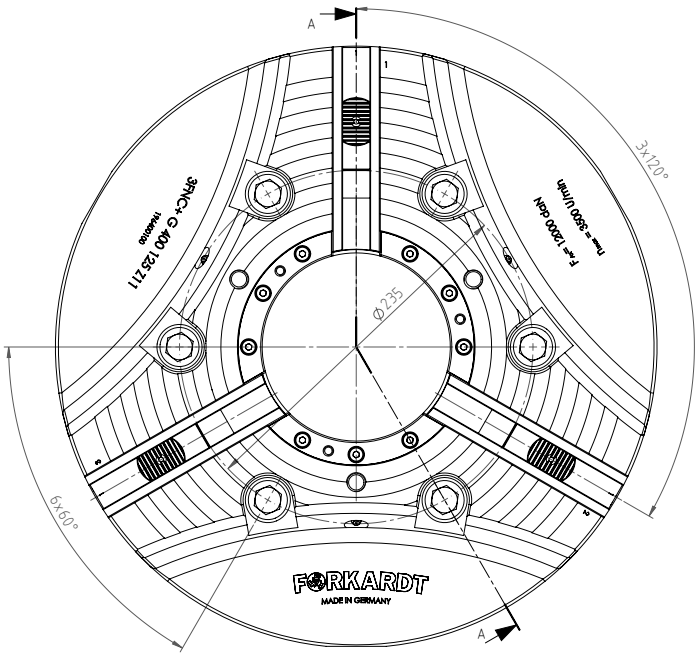

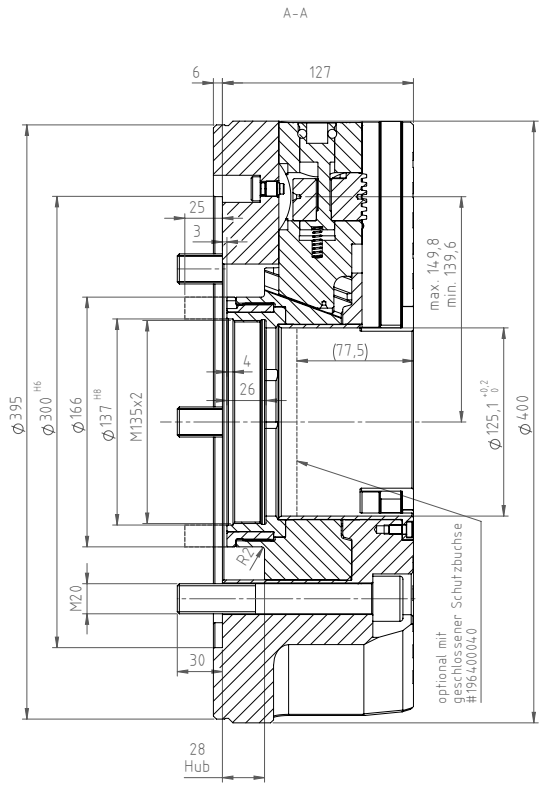

PERFORMANCE DATA		
Max. Speed	rpm.	3,300
Max. Clamping force	daN	24,000
Max. Actuating force	daN	12,000
Weight	Kg	79.7
Jaw stroke	mm	10.2
Serration	Straight serration	

CYL . MOUNTING DIN 6350

SPINDLE SIZE DIN55026	WITHOUT BASE AND TOP TOOLING	INCL. ONE PIECE STEP JAW (GSTB)	INCL. BASE & HARD TOP JAW (GGB + FHB)
Z 300	D196400100	D196400179	D196400178

MOUNTING SCREW	6 X M20

SHORT TAPER DIN 55026

To build on a spindle according to DIN 55026 you need an additional flange with the required cone size.

SPINDLE SIZE DIN55026	ITEM NUMBER
K8	D196400K08
K11	D196400K11

FORKARDT® | 3FNC+G 400-125

POWER CHUCK WITH QUICK CHANGE JAW SYSTEM

WRENCH FOR JAW CHANGE
D196315010

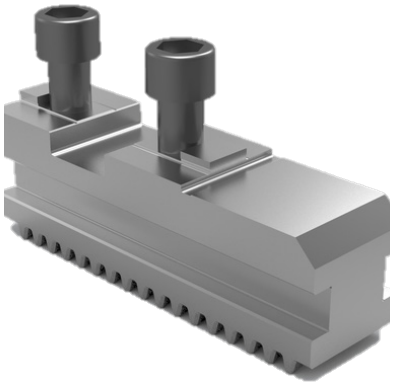

BASE JAW GGB315
D180596400

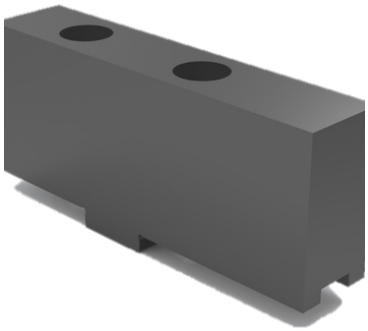

SOFT TOP JAW FWB315
D1070033425

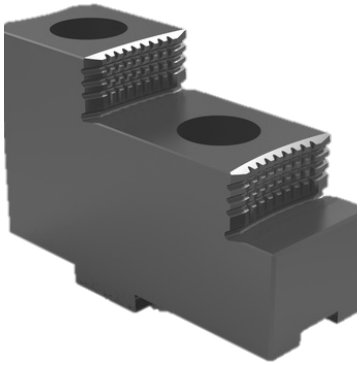

HARD TOP JAW FHB315
D1070033524

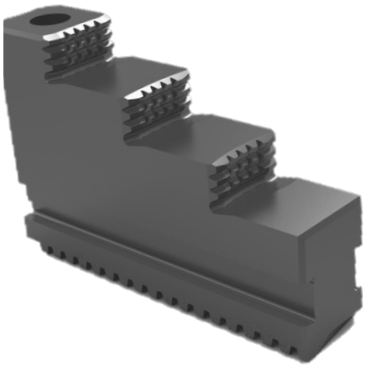

ONE PIECE STEPED JAW GSTB315
D1070033433

SOFT MONOBLOK JAW GMB315
D1070033434

FORKARDT® | 3FNC+G 400-125

POWER CHUCK WITH QUICK CHANGE JAW SYSTEM

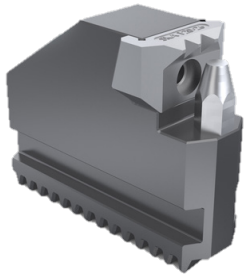

GRIPPER JAW OD-CLAMPING KBKTNC

Clamping Range	Item Number
Upon Request	Upon Request

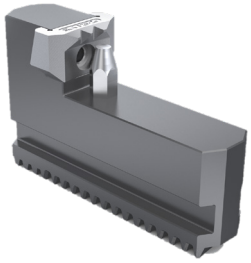

GRIPPER JAW ID-CLAMPING KBKTNC

Clamping Range	Item Number
Upon Request	Upon Request

GREASE (CARTRIDGE 400 GR) PF26

D410140026

GREASE (CAN 1 KG) PF26

D4101400126

FORKARDT® | 3FNC+G 400-125

POWER CHUCK WITH QUICK CHANGE JAW SYSTEM

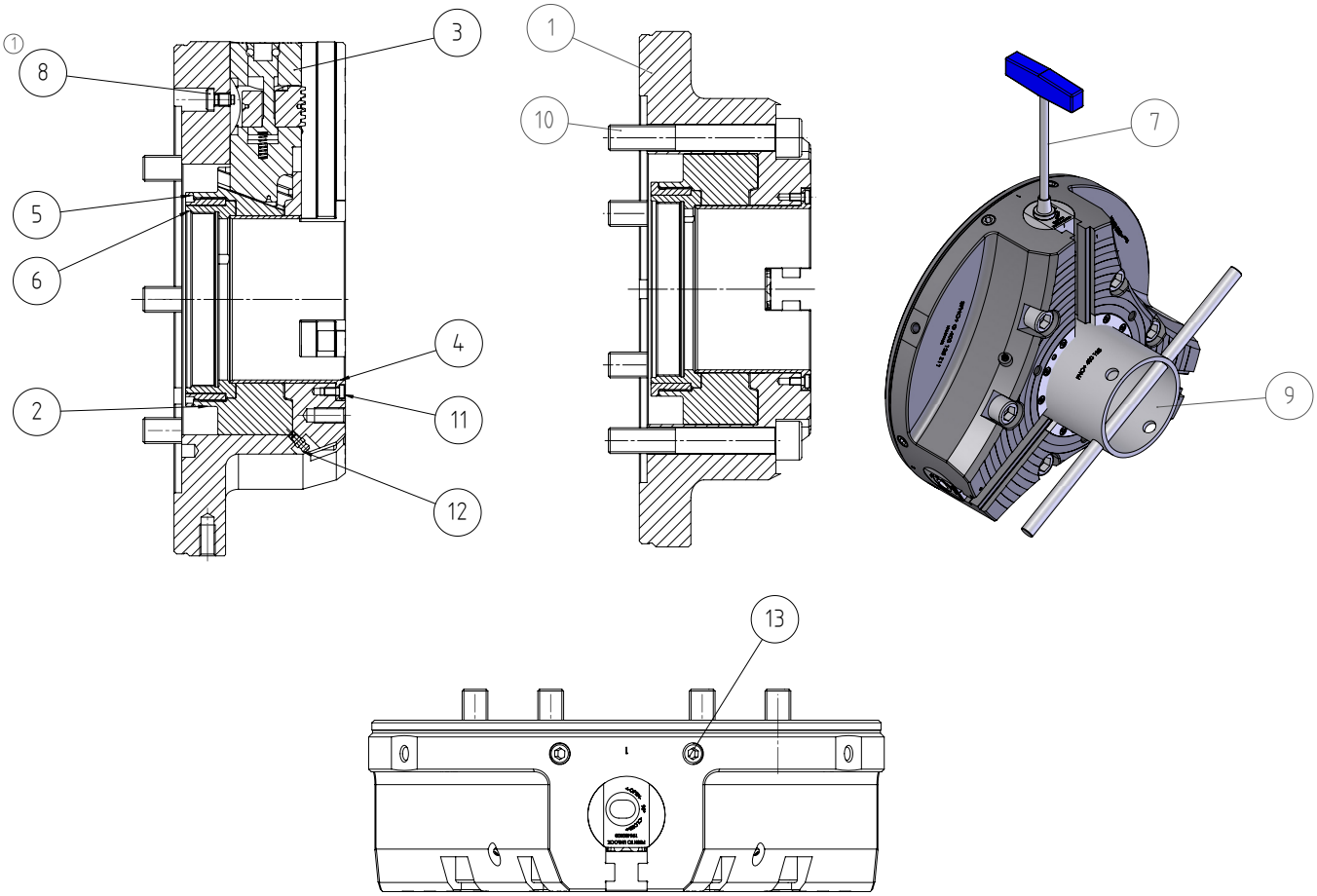

No.	LABEL	ITEM NUMBER
1	BODY	196400101
2	PISTONS	196400002
3	DRIVING JAW COMPLETE	196400410
4	PROTECTIVE BUSHING	196630004
5	THREADED BUSH COVER	196400007
6	THREAD BUCKLE	196400008
7	KEY KPL	196315010
8	CAP SCREW	196185015
9	MOUNTING KEY KPL	196400020
10	CYLINDER SCREW	DIN912-M20x130-10.9
11	CYLINDER SCREW	DIN7984-M6x12-10.9
12	CYLINDER PIN WITH INTERNAL THREAD	7097KAM6X1
13	THREAD PIN	DIN913-M16x30-45H