FORKARDT®

3FNC+S 185-52

POWER CHUCK WITH QUICK CHANGE JAW SYSTEM

FORKARDT® | 3FNC+S 185-52

POWER CHUCK WITH QUICK CHANGE JAW SYSTEM

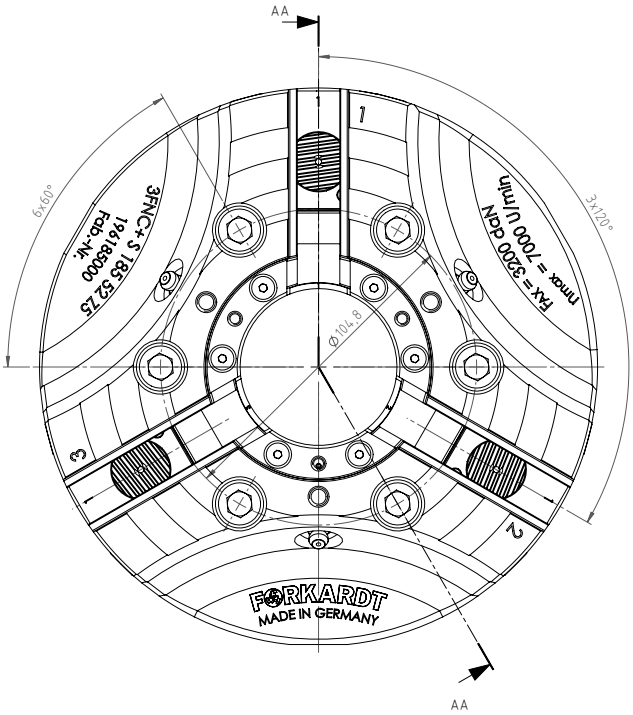

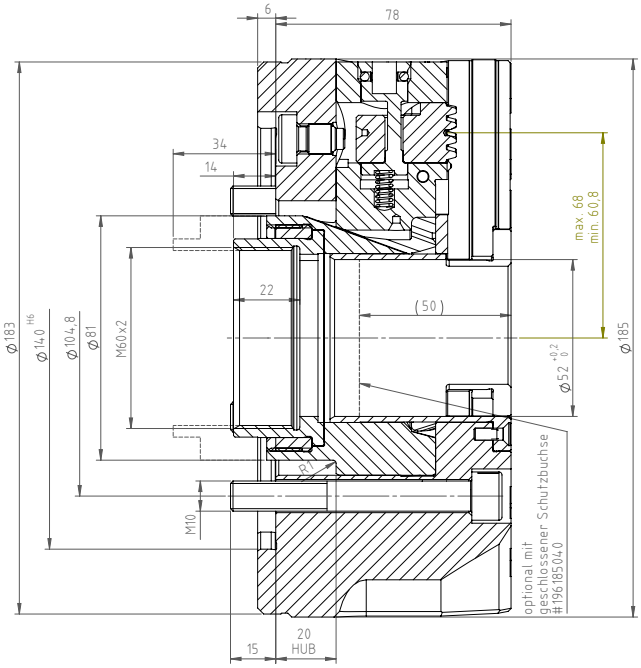

PERFORMANCE DATA		
Max. Speed	rpm	7,000
Max. Clamping force	daN	6,000
Max. Actuating force	daN	3,200
Weight	Kg	11
Jaw stroke	mm	7.2
Serration	Angled Serration	

FORKARDT® | 3FNC+S 185-52

POWER CHUCK WITH QUICK CHANGE JAW SYSTEM

CYL . MOUNTING DIN 6350

SPINDLE SIZE DIN55026	WITHOUT BASE AND TOP TOOLING	INCL. ONE PIECE STEP JAW (FSTB)	INCL. BASE & HARD TOP JAW (FGB + FHB)
Z 140	D196185000	D196185979	D196185978

MOUNTING SCREW	6 X M10

SHORT TAPER DIN 55026

To build on a spindle according to DIN 55026 you need an additional flange with the required cone size.

SPINDLE SIZE DIN55026	ITEM NUMBER
K5	D196185K05
K6	D196185K06

FORKARDT® | 3FNC+S 185-52

POWER CHUCK WITH QUICK CHANGE JAW SYSTEM

WRENCH FOR JAW CHANGE
D196215010

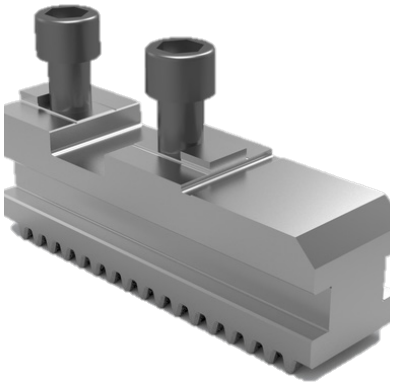

BASE JAW GGB160
D180567400

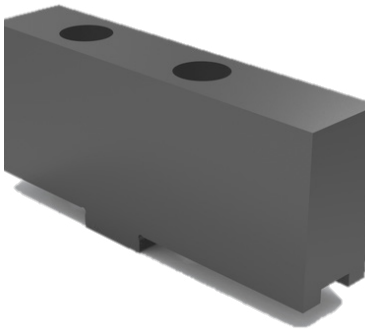

SOFT TOP JAW FWB160
D1070016525

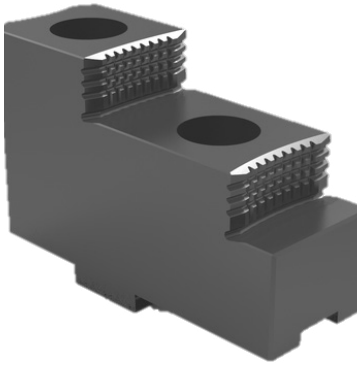

HARD TOP JAW FHB160
D1070016624

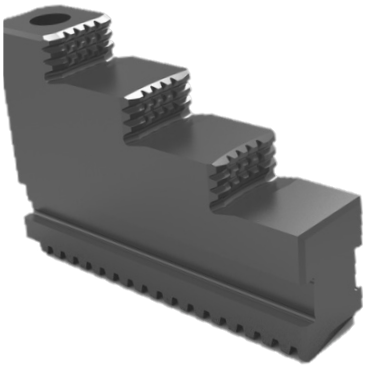

ONE PIECE STEPED JAW FSTB160
D1070016633

SOFT MONOBLOK JAW FMB160
D1070016734

FORKARDT® | 3FNC+S 185-52

POWER CHUCK WITH QUICK CHANGE JAW SYSTEM

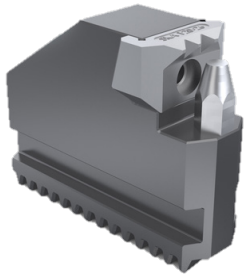

GRIPPER JAW OD-CLAMPING KBKTNC

Clamping Range	Item Number
Ø 29-93	D1161832000
Ø 82-160	D45464000
Ø 105-174	D45465000

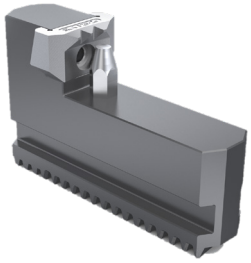

GRIPPER JAW ID-CLAMPING KBKTNC

Clamping Range	Item Number
Ø 133-212	D45467000

GREASE (CARTRIDGE 400 GR) PF26

D410140026

GREASE (CAN 1 KG) PF26

D410140126

HYDRAULIC GREASE GUN

D4101400121

GRIPPING FORCE METER (Ø 63-293) SKM1200

D300224000

THRUST BOLTS FOR INCREASING THE GRIPPING RANGE

D300224003

FORKARDT® | 3FNC+S 185-52

POWER CHUCK WITH QUICK CHANGE JAW SYSTEM

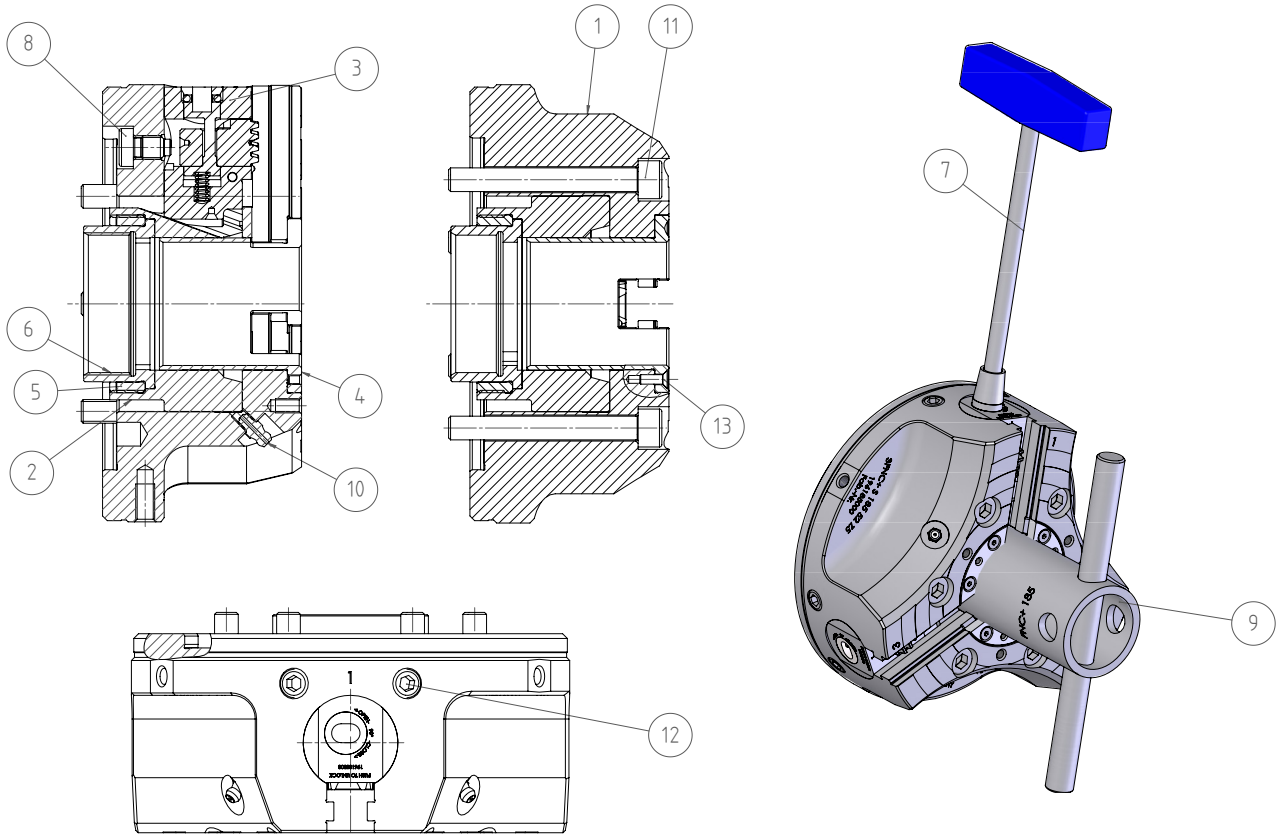

No.	LABEL	ITEM NUMBER
1	BODY	196185001
2	PISTONS	196185002
3	DRIVING JAW COMPLETE	196185400
4	PROTECTIVE BUSHING	196185004
5	THREADED BUSH COVER	196185007
6	THREAD BUCKLE	196185008
7	KEY KPL	196215010
8	CAP SCREW	196185015
9	MOUNTING KEY KPL	196185020
10	LUBRICATING NIPPLE	DIN71412-AM6-St
11	CAP SCREW	DIN912-M10x80-10.9
12	THREAD PIN	DIN913-M12x25-45H
13	COUNTERSUNK SCREW	DIN7991-M4x12-10.9