FORKARDT®

3FNC+S 215-66

POWER CHUCK WITH QUICK CHANGE JAW SYSTEM

FORKARDT® | 3FNC+S 215-66

POWER CHUCK WITH QUICK CHANGE JAW SYSTEM

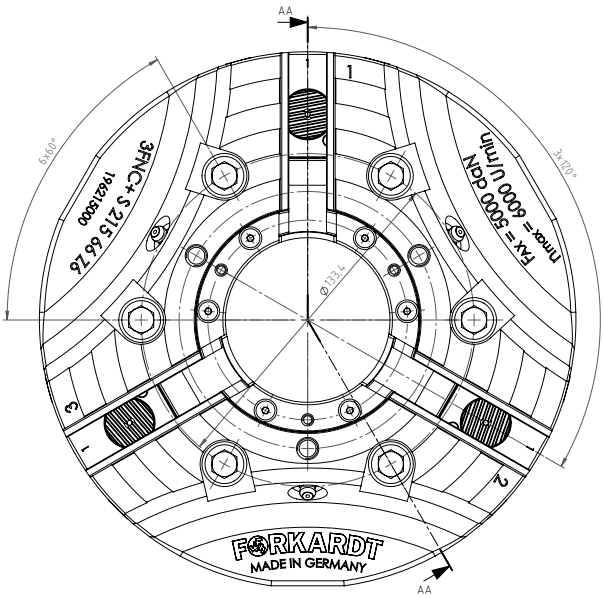

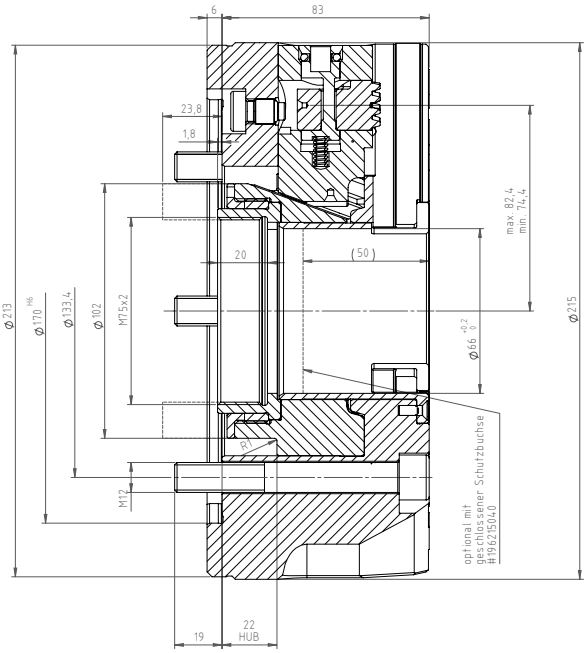

PERFORMANCE DATA		
Max. Speed	rpm	6,000
Max. Clamping force	daN	9,000
Max. Actuating force	daN	5,000
Weight	Kg	15.4
Jaw stroke	mm	8
Serration	Angled serration	

FORKARDT® | 3FNC+S 215-66

POWER CHUCK WITH QUICK CHANGE JAW SYSTEM

CYL . MOUNTING DIN 6350

SPINDLE SIZE DIN55026	WITHOUT BASE AND TOP TOOLING	INCL. ONE PIECE STEP JAW (FSTB)	INCL. BASE & HARD TOP JAW (FGB + FHB)
Z 170	D196215000	D196215979	D196215978

MOUNTING SCREW	6 X M12

SHORT TAPER DIN 55026

To build on a spindle according to DIN 55026 you need an additional flange with the required cone size.

SPINDLE SIZE DIN55026	ITEM NUMBER
K6	D196185K06
K8	D196185K08

FORKARDT® | 3FNC+S 215-66

POWER CHUCK WITH QUICK CHANGE JAW SYSTEM

WRENCH FOR JAW CHANGE
D196215010

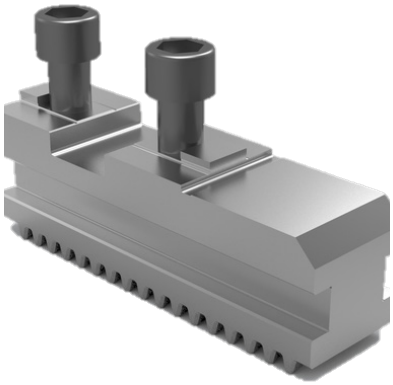

BASE JAW FGB200
D180577000

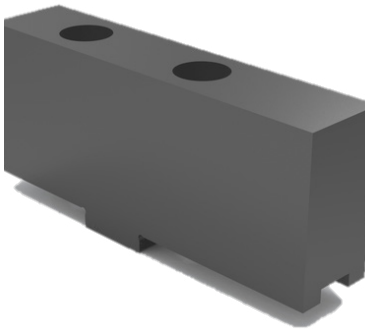

SOFT TOP JAW FWB200
D1070021525

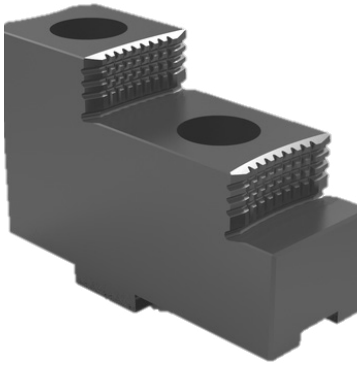

HARD TOP JAW FHB200
D1070021624

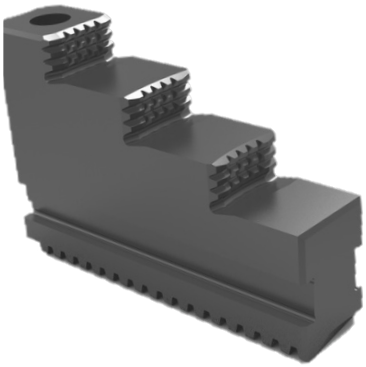

ONE PIECE STEPED JAW FSTB200
D1070021633

SOFT MONOBLOK JAW FMB200
D1070021734

FORKARDT® | 3FNC+S 215-66

POWER CHUCK WITH QUICK CHANGE JAW SYSTEM

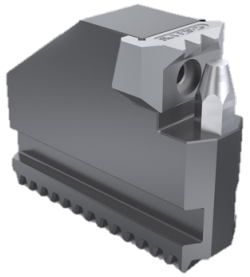

GRIPPER JAW OD-CLAMPING KBKTNC

Clamping Range	Item Number
Ø 41-122	D161833000
Ø 64-104	D45469000
Ø 108-188	D45470000
Ø 130-211	D45471000

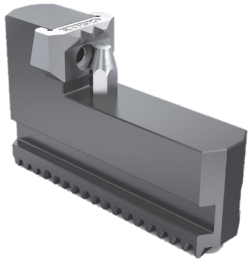

GRIPPER JAW ID-CLAMPING KBKTNC

Clamping Range	Item Number
Ø 106-186	D45472000
Ø 161-242	D45473000

GREASE (CARTRIDGE 400 GR) PF26

D410140026

GREASE (CAN 1 KG) PF26

D410140126

HYDRAULIC GREASE GUN

D4101400121

GRIPPING FORCE METER (Ø 63-293) SKM1200

D300224000

THRUST BOLTS FOR INCREASING THE GRIPPING RANGE

D300224003

FORKARDT® | 3FNC+S 215-66

POWER CHUCK WITH QUICK CHANGE JAW SYSTEM

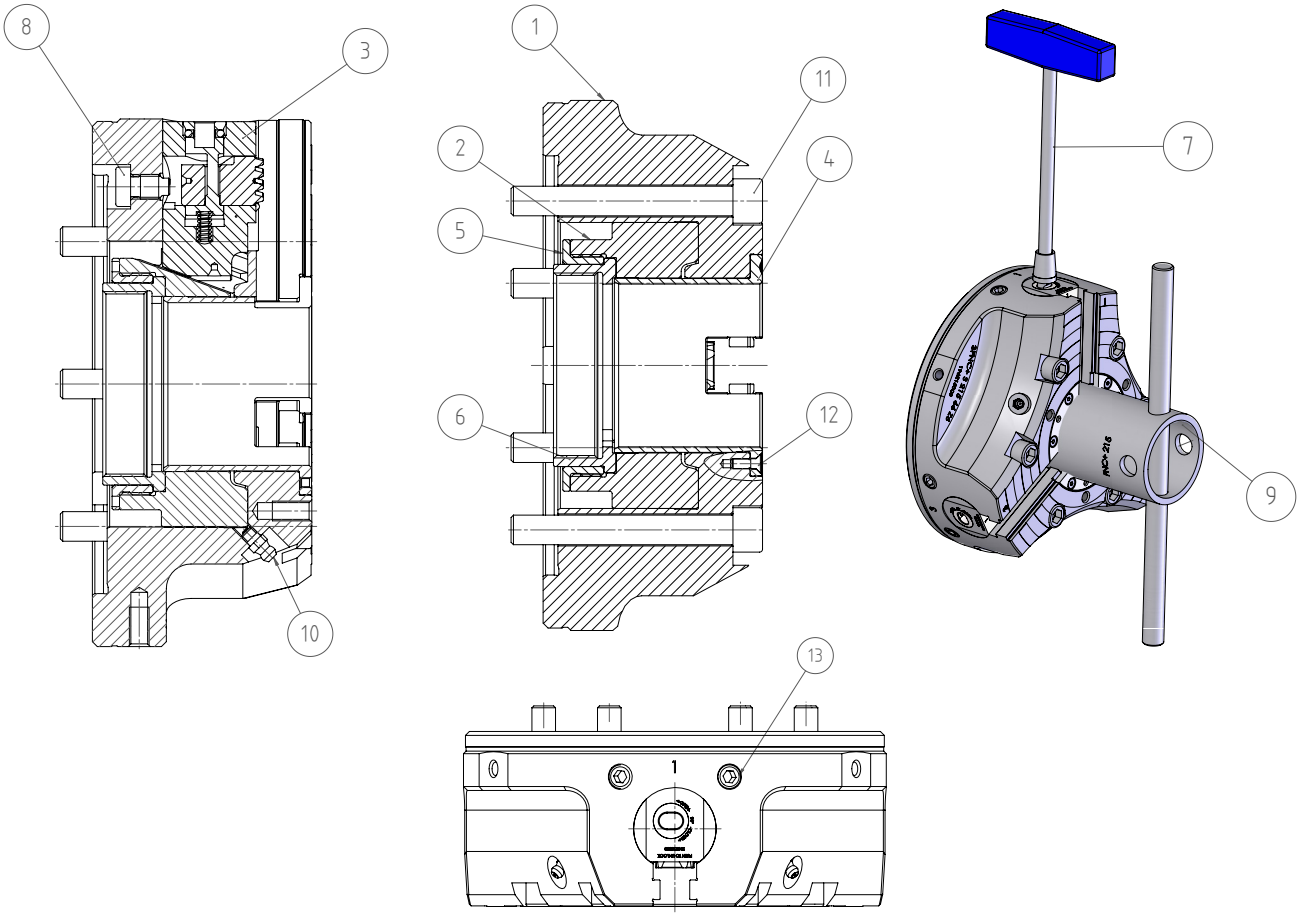

No.	LABEL	ITEM NUMBER
1	BODY	196215001
2	PISTONS	196215002
3	DRIVING JAW COMPLETE	196215400
4	PROTECTIVE BUSHING	196215004
5	THREADED BUSH COVER	196215007
6	THREAD BUCKLE	196215008
7	KEY KPL	196215010
8	CAP SCREW	196185015
9	MOUNTING KEY KPL	196215020
10	LUBRICATING NIPPLE	7097KAM6X1
11	CAP SCREW	DIN912-M12x90-10.9
12	COUNTERSUNK SCREW	DIN7991-M4x12-10.9
13	THREAD PIN	7051A12050