FORKARDT®

3FNC+S 315-104

POWER CHUCK WITH QUICK CHANGE JAW SYSTEM

FORKARDT® | 3FNC+S 315-104

POWER CHUCK WITH QUICK CHANGE JAW SYSTEM

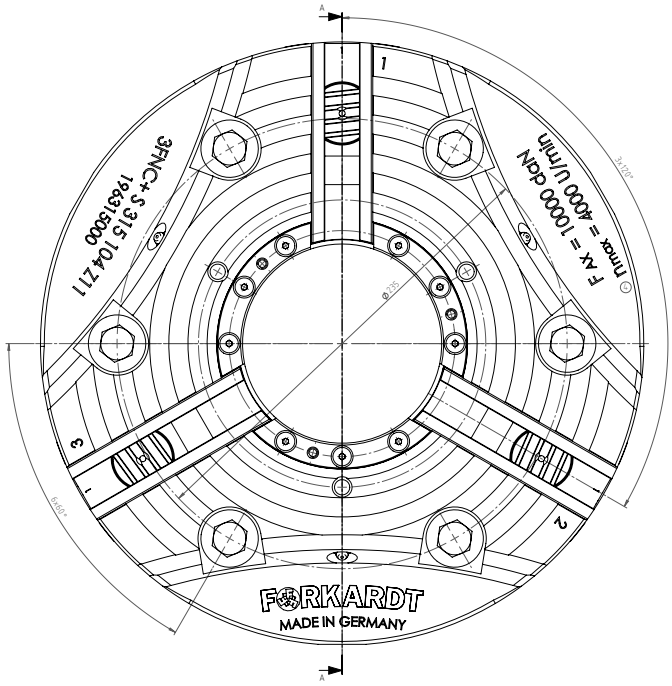

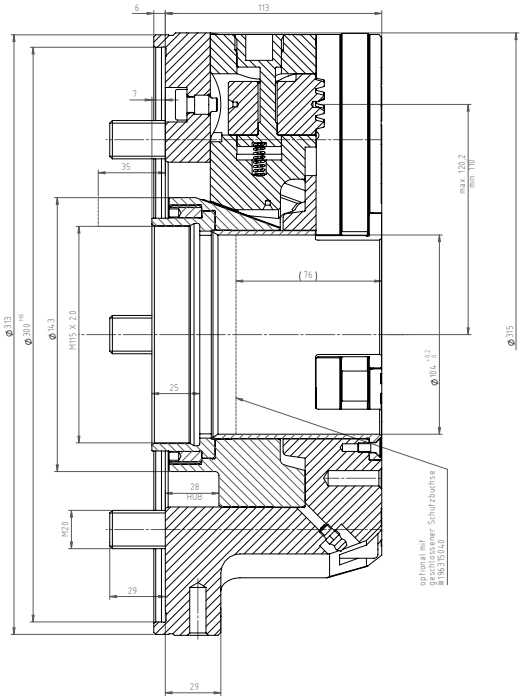

PERFORMANCE DATA

Max. Speed	rpm.	4,000
Max. Clamping force	daN	18,500
Max. Actuating force	daN	10,000
Weight	Kg	44.4
Jaw stroke	mm	10.2
Serration	Angled serration	

FORKARDT® | 3FNC+S 315-104

POWER CHUCK WITH QUICK CHANGE JAW SYSTEM

CYL . MOUNTING DIN 6350

SPINDLE SIZE DIN55026	WITHOUT BASE AND TOP TOOLING	INCL. ONE PIECE STEP JAW (FSTB)	INCL. BASE & HARD TOP JAW (FGB + FHB)
Z 300	D196315000	D196315979	D196315978

MOUNTING SCREW	6 X M20

SHORT TAPER DIN 55026

To build on a spindle according to DIN 55026 you need an additional flange with the required cone size.

SPINDLE SIZE DIN55026	ITEM NUMBER
K8	D196316K08
K11	D196315K11

FORKARDT® | 3FNC+S 315-104

POWER CHUCK WITH QUICK CHANGE JAW SYSTEM

WRENCH FOR JAW CHANGE
D196315010

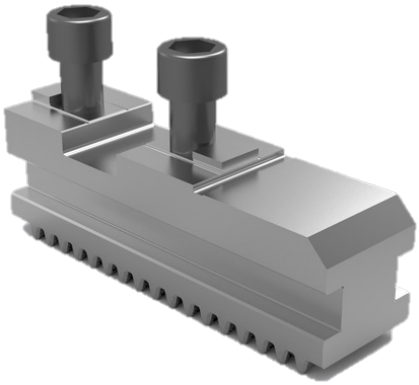

BASE JAW FGB315
D180596000

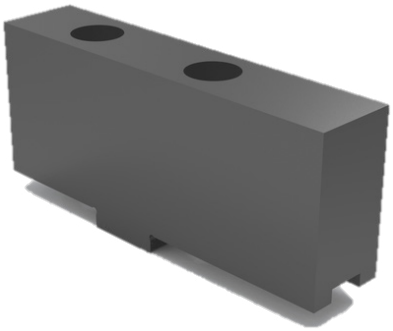

SOFT TOP JAW FWB315
D1070033425

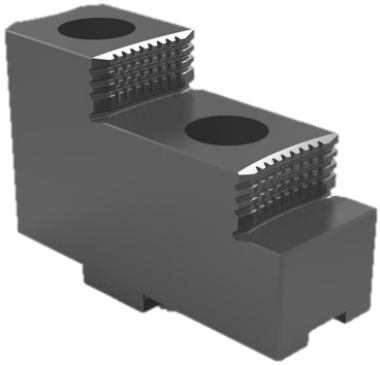

HARD TOP JAW FHB315
D1070033524

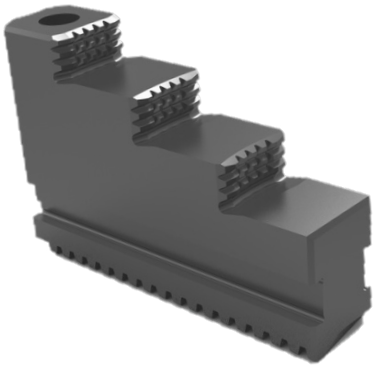

ONE PIECE STEPED JAW FSTB315
D1070033533

SOFT MONOBLOK JAW FMB315
D1070033034

FORKARDT® | 3FNC+S 315-104

POWER CHUCK WITH QUICK CHANGE JAW SYSTEM

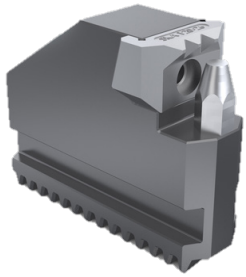

GRIPPER JAW OD-CLAMPING KBKTNC

Clamping Range	Item Number
Ø 50-130	D161835000
Ø 120-169	D45483000
Ø 177-292	D45484000
Ø 257-328	D45485000

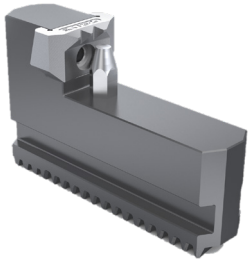

GRIPPER JAW ID-CLAMPING KBKTNC

Clamping Range	Item Number
Ø 126-248	D45486000
Ø 250-364	D45487000

GREASE (CARTRIDGE 400 GR) PF26

D410140026

GREASE (CAN 1 KG) PF26

D410140126

HYDRAULIC GREASE GUN

D4101400121

GRIPPING FORCE METER (Ø 63-293) SKM1200

D300224000

THRUST BOLTS FOR INCREASING THE GRIPPING RANGE

D300224003

FORKARDT® | 3FNC+S 315-104

POWER CHUCK WITH QUICK CHANGE JAW SYSTEM

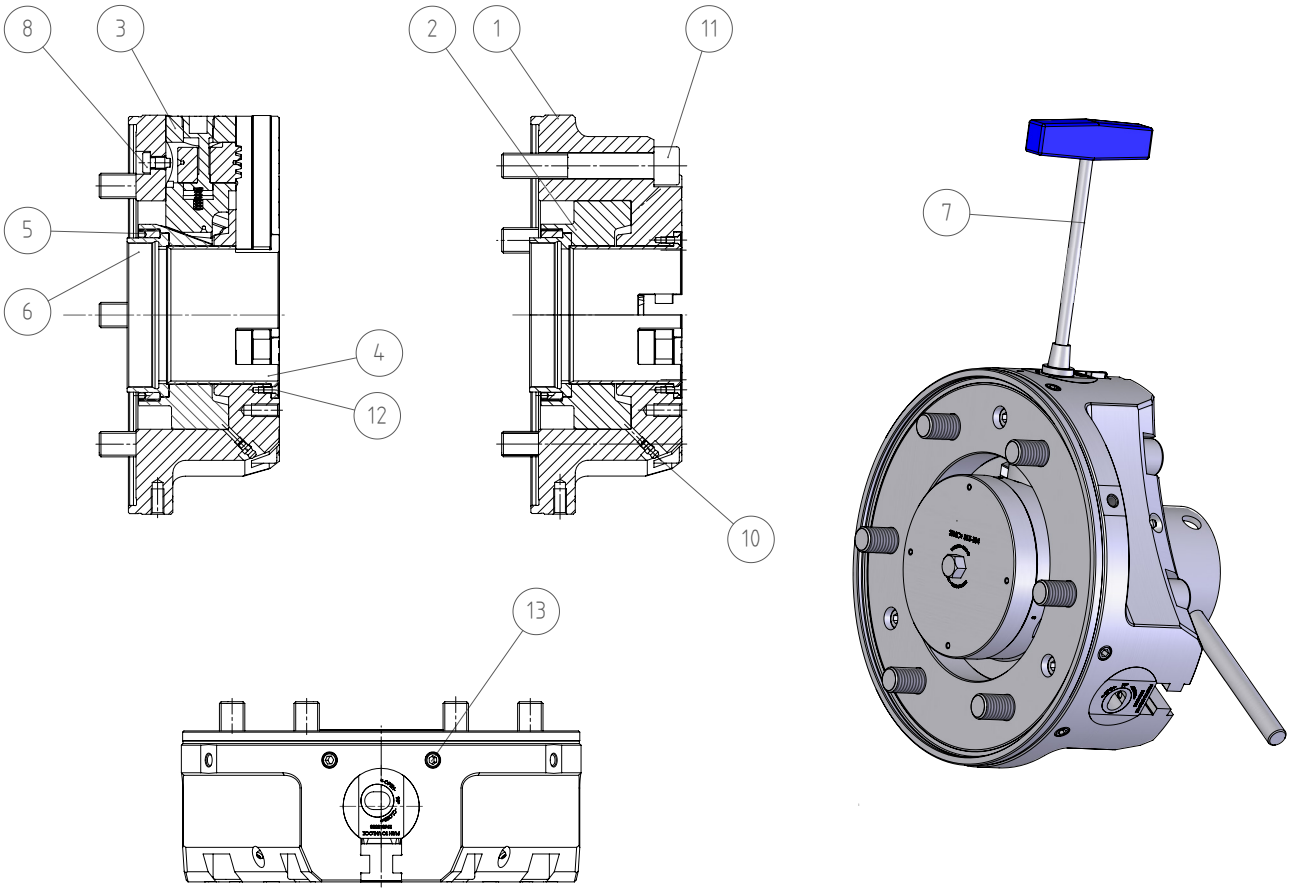

No.	LABEL	ITEM NUMBER
1	BODY	196260001
2	PISTONS	196260002
3	DRIVING JAW COMPLETE	196260400
4	PROTECTIVE BUSHING	196260004
5	THREADED BUSH COVER	196260007
6	THREAD BUCKLE	196260008
7	KEY KPL	196260010
8	CAP SCREW	196185015
9	MOUNTING KEY KPL	196260020
10	GREASE NIPPLE	DIN912-M16x100-10.9
11	LUBRICATING NIPPLE	703D004030
12	CAP SCREW	7051A12050
13	COUNTERSUNK SCREW	7097KAM6X1