FORKARDT®

3FNC+S 400-125

POWER CHUCK WITH QUICK CHANGE JAW SYSTEM

FORKARDT® | 3FNC+S 400-125

POWER CHUCK WITH QUICK CHANGE JAW SYSTEM

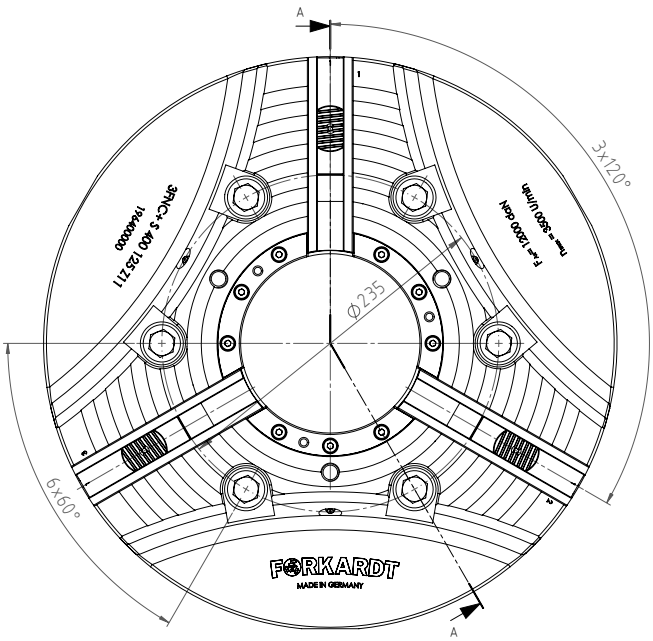

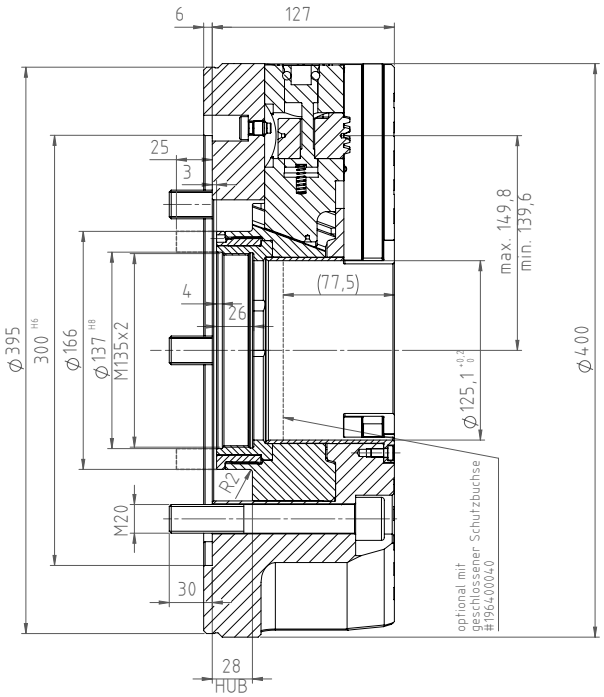

PERFORMANCE DATA		
Max. Speed	rpm	3,500
Max. Clamping force	daN	24,000
Max. Actuating force	daN	12,000
Weight	Kg	72.9
Jaw stroke	mm	10.2
Serration	Angled serration	

FORKARDT® | 3FNC+S 400-125

POWER CHUCK WITH QUICK CHANGE JAW SYSTEM

CYL . MOUNTING DIN 6350

SPINDLE SIZE DIN55026	WITHOUT BASE AND TOP TOOLING	INCL. ONE PIECE STEP JAW (FSTB)	INCL. BASE & HARD TOP JAW (FGB + FHB)
Z 300	D196400000	D196400979	D196400978

MOUNTING SCREW	6 X M20

SHORT TAPER DIN 55026

To build on a spindle according to DIN 55026 you need an additional flange with the required cone size.

SPINDLE SIZE DIN55026	ITEM NUMBER
K8	D196400K08
K11	D196400K11

FORKARDT® | 3FNC+S 400-125

POWER CHUCK WITH QUICK CHANGE JAW SYSTEM

WRENCH FOR JAW CHANGE
D196315010

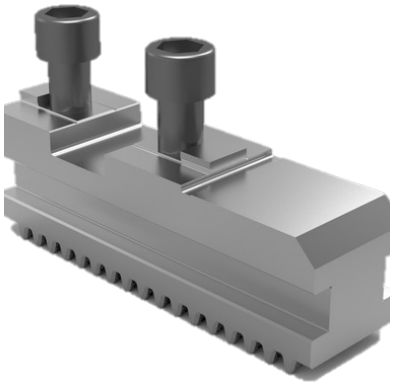

BASE JAW FGB315
D180596000

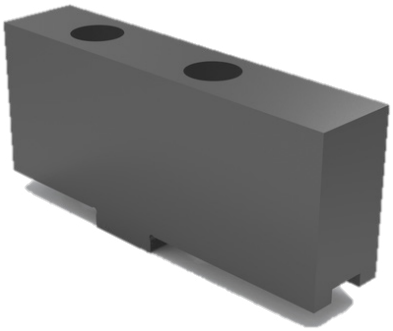

SOFT TOP JAW FWB315
D1070033425

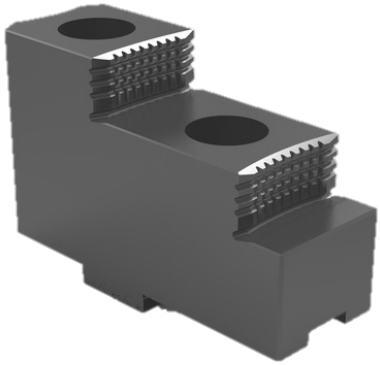

HARD TOP JAW FHB315
D1070033524

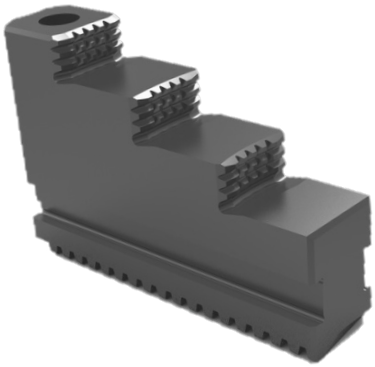

ONE PIECE STEPED JAW FSTB315
D1070033533

SOFT MONOBLOK JAW FMB315
D1070033034

FORKARDT® | 3FNC+S 400-125

POWER CHUCK WITH QUICK CHANGE JAW SYSTEM

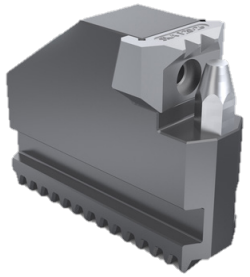

GRIPPER JAW OD-CLAMPING KBKTNC

Clamping Range	Item Number
Ø 69-224	D161835000
Ø 119-255	D45483000
Ø 222-379	D45484000
Ø 298-402	D45485000

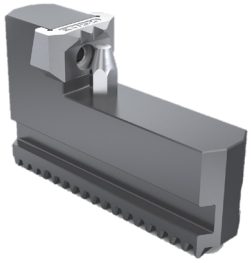

GRIPPER JAW ID-CLAMPING KBKTNC

Clamping Range	Item Number
Ø 171-328	D45486000
Ø 295-452	D45487000

GREASE (CARTRIDGE 400 GR) PF26

D410140026

GREASE (CAN 1 KG) PF26

D410140126

HYDRAULIC GREASE GUN

D4101400121

GRIPPING FORCE METER (Ø 63-293) SKM1200

D300229000

THRUST BOLTS FOR INCREASING THE GRIPPING RANGE

D300229003

FORKARDT® | 3FNC+S 400-125

POWER CHUCK WITH QUICK CHANGE JAW SYSTEM

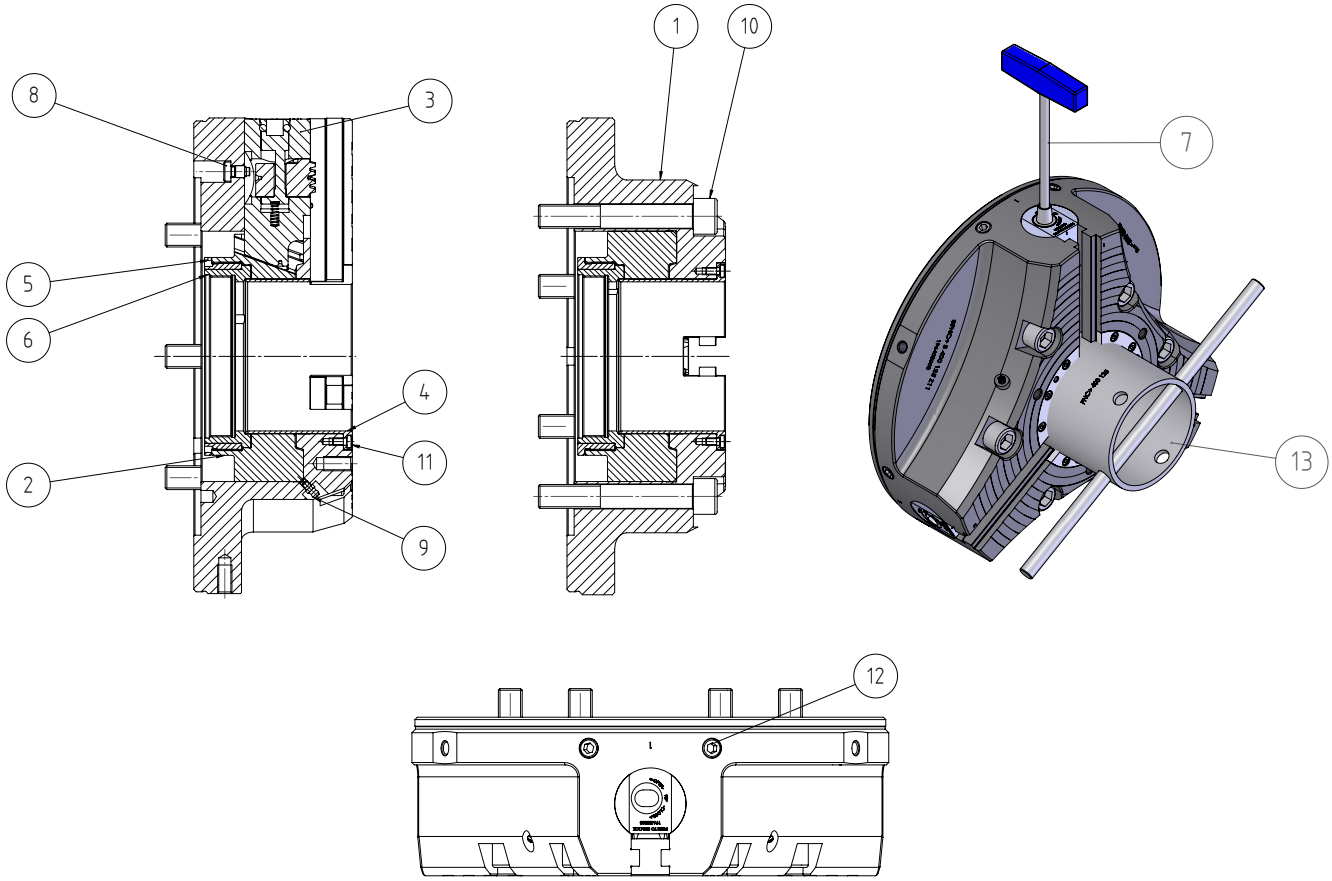

No.	LABEL	ITEM NUMBER
1	BODY	196400001
2	PISTONS	196400002
3	DRIVING JAW COMPLETE	196400400
4	PROTECTIVE BUSHING	196400004
5	THREADED BUSH COVER	196400007
6	THREAD BUCKLE	196400008
7	KEY KPL	196315010
8	CAP SCREW	196185015
9	MOUNTING KEY KPL	7097KAM6X1
10	CAP SCREW	DIN912-M20x130-10.9
11	CAP SCREW	DIN7984-M6x12-10.9
12	COUNTERSUNK SCREW	DIN913-M16x30-45H
13	MOUNTING KEY KPL	196400020