FORKARDT®

3FNC+S 630-165

POWER CHUCK WITH QUICK CHANGE JAW SYSTEM

FORKARDT® | 3FNC+S 630-165

POWER CHUCK WITH QUICK CHANGE JAW SYSTEM

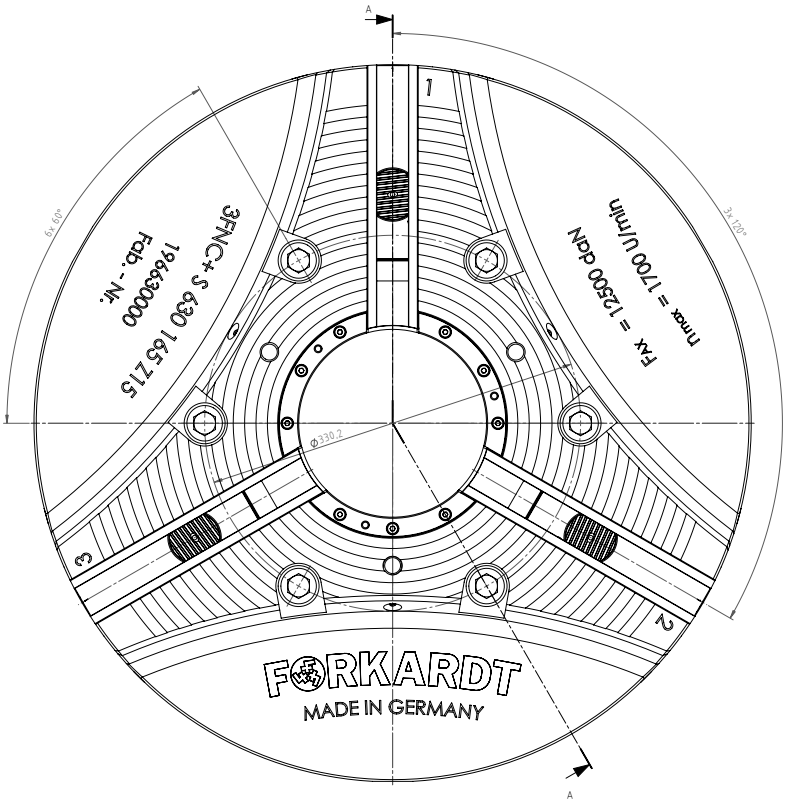

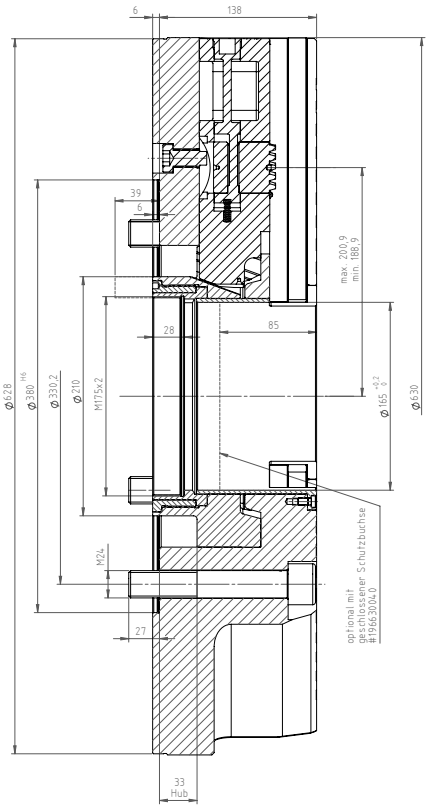

PERFORMANCE DATA		
Max. Speed	rpm	1,700
Max. Clamping force	daN	25,000
Max. Actuating force	daN	12,500
Weight	Kg	199.4
Jaw stroke	mm	12
Serration	Angled serration	

CYL . MOUNTING DIN 6350

SPINDLE SIZE DIN55026	WITHOUT BASE AND TOP TOOLING	INCL. ONE PIECE STEP JAW (FSTB)	INCL. BASE & HARD TOP JAW (FGB + FHB)
Z 380	D196500000	D196500979	D196500978

MOUNTING SCREW	6 X M24

SHORT TAPER DIN 55026

To build on a spindle according to DIN 55026 you need an additional flange with the required cone size.

SPINDLE SIZE DIN55026	ITEM NUMBER
K11	D196500K11
K15	D196500K15

FORKARDT® | 3FNC+S 630-165

POWER CHUCK WITH QUICK CHANGE JAW SYSTEM

WRENCH FOR JAW CHANGE
D196315010

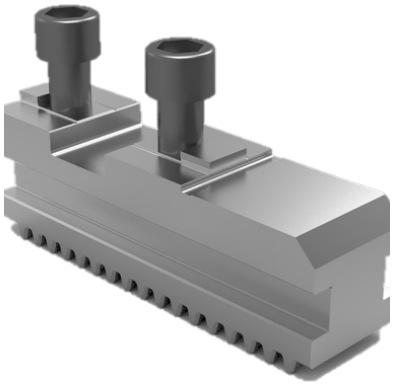

BASE JAW FGB315
D180596000

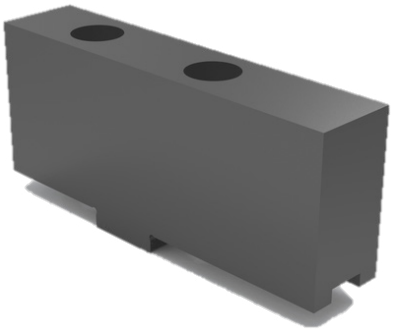

SOFT TOP JAW FWB315
D1070033425

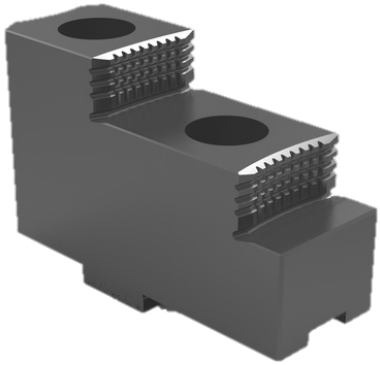

HARD TOP JAW FHB315
D1070033524

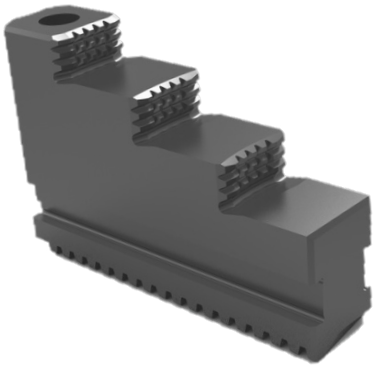

ONE PIECE STEPED JAW FSTB315
D1070033533

SOFT MONOBLOK JAW FMB315
D1070033034

FORKARDT® | 3FNC+S 630-165

POWER CHUCK WITH QUICK CHANGE JAW SYSTEM

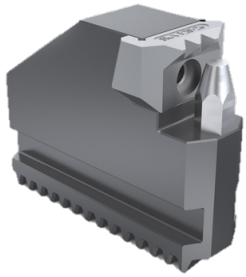

GRIPPER JAW OD-CLAMPING KBKTNC

Clamping Range	Item Number
Ø 90-303	D45488000
Ø 264-488	D45490000
Ø 373-528	D45491000

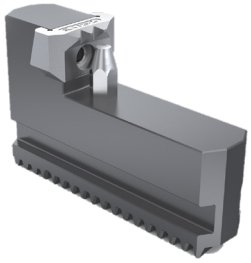

GRIPPER JAW ID-CLAMPING KBKTNC

Clamping Range	Item Number
Ø 174-309	D45492000
Ø 294-519	D45493000
Ø 354-555	D45494000

GREASE (CARTRIDGE 400 GR) PF26

D410140026

GREASE (CAN 1 KG) PF26

D410140126

HYDRAULIC GREASE GUN

D4101400121

GRIPPING FORCE METER (Ø 114-744) SKM1500

D300229000

THRUST BOLTS FOR INCREASING THE GRIPPING RANGE

D300229003

FORKARDT® | 3FNC+S 630-165

POWER CHUCK WITH QUICK CHANGE JAW SYSTEM

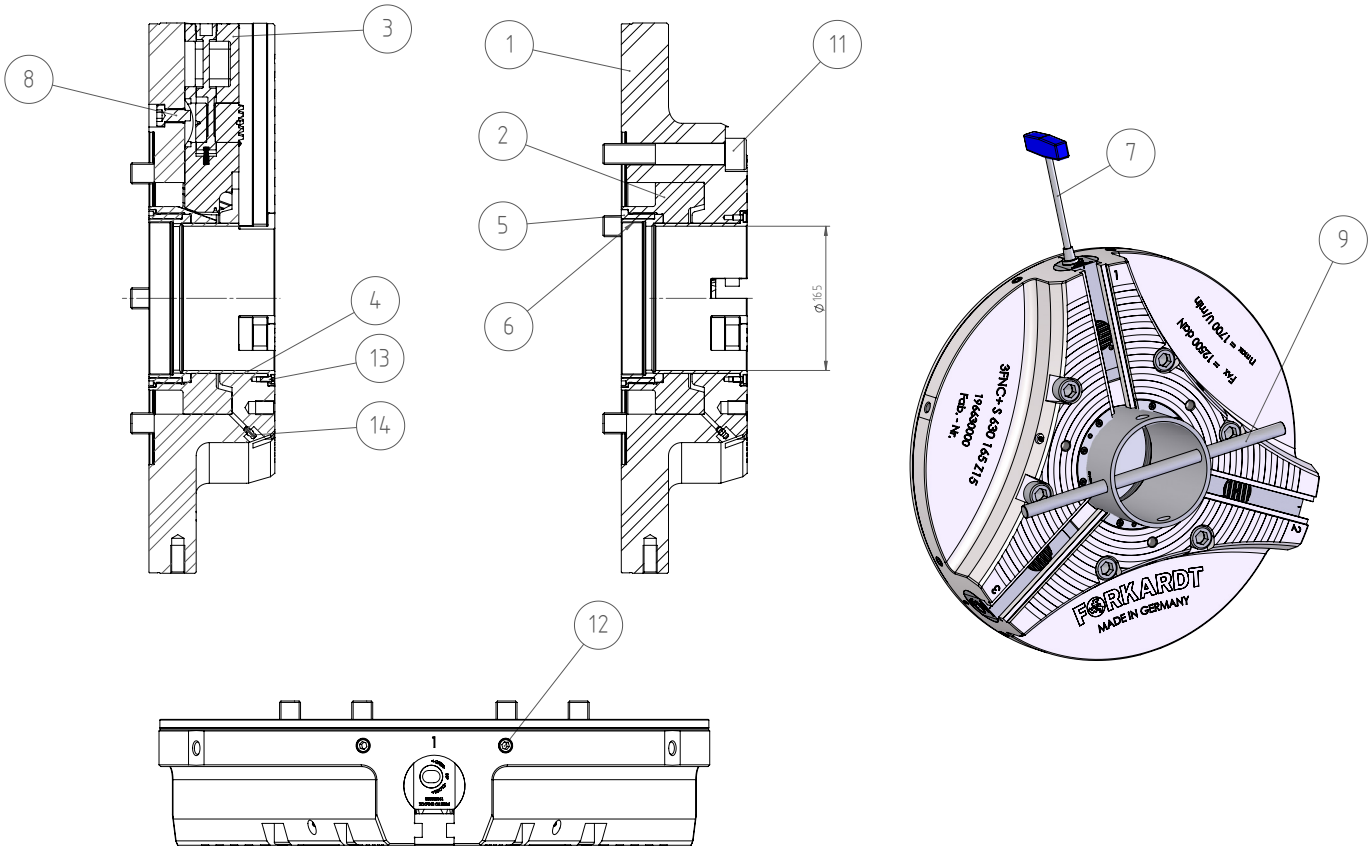

No.	LABEL	ITEM NUMBER
1	BODY	196630001
2	PISTON	196630002
3	DRIFT JAW COMPLETE	196630400
4	PROTECTIVE BUSHING	196630004
5	THREADED BUSHING COVER	196630007
6	THREADED BUSHING	196630008
7	KEY KPL	196315010
8	JAW FUSE	196500015
9	MOUNTING KEY KPL	196630020
10	CYLINDRICAL PIN WITH INTERNAL THREAD	DIN7979-4m6x16
11	CYLINDRICAL SCREW	DIN912-M24x140-10.9
12	GRUB SCREW	DIN913-M16x30-45H
13	CYLINDRICAL SCREW	DIN7984-M6x12-10.9
14	GREASE NIPPLE	7097KAM6X1